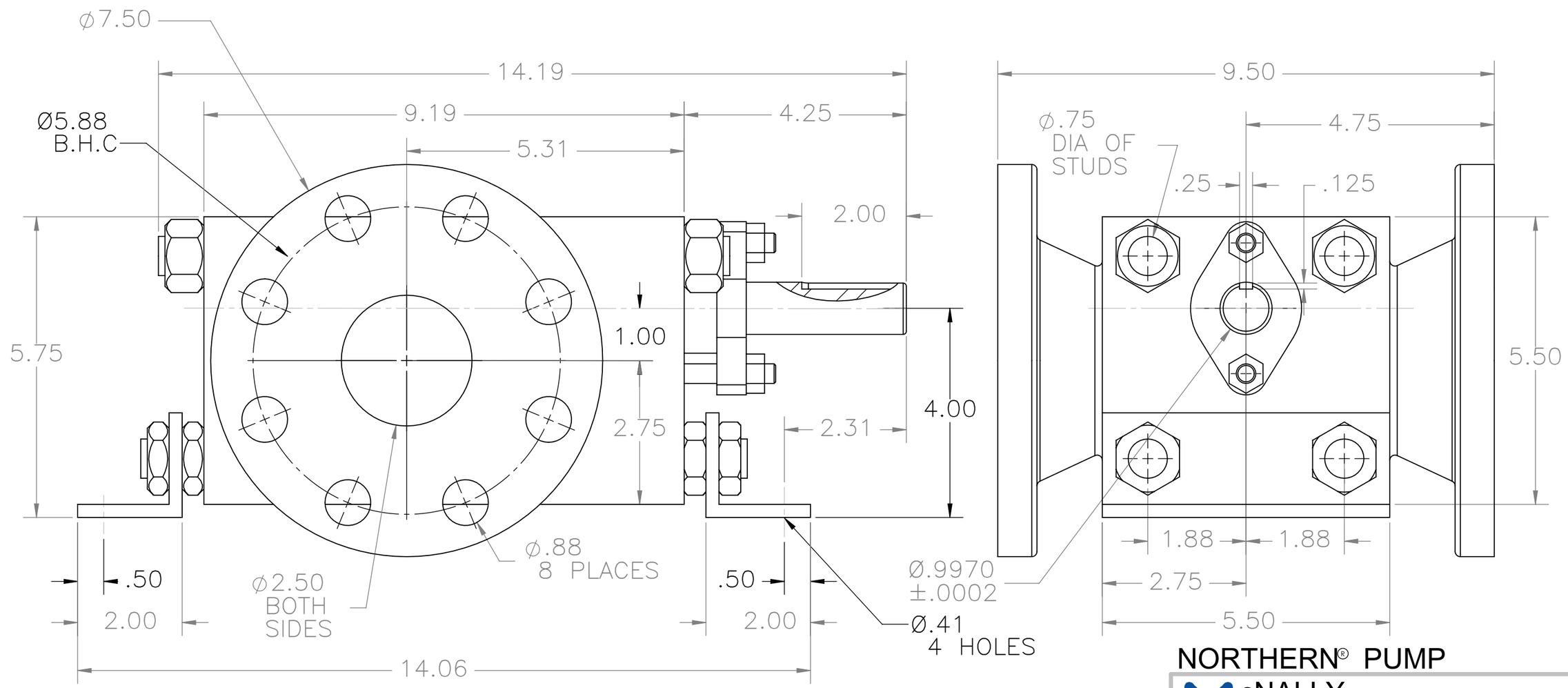

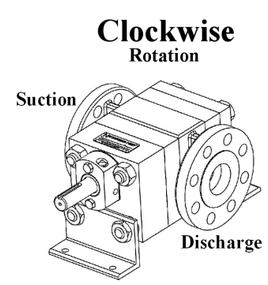

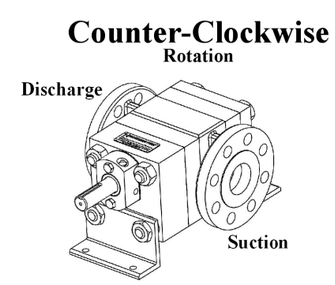

NORTHERN® PUMP

McNALLY

McNALLY INDUSTRIES, LLC.

340 WEST BENSON AVE., GRANTSBURG, WI 54840 (715)463-8300

PUMP ASSEMBLY

4600–30

SCALE: 1:2	ESTIMATED WEIGHT:	SHEET 1 OF 1